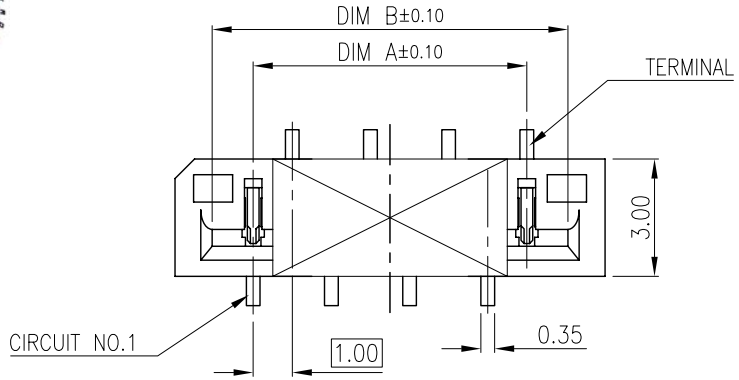

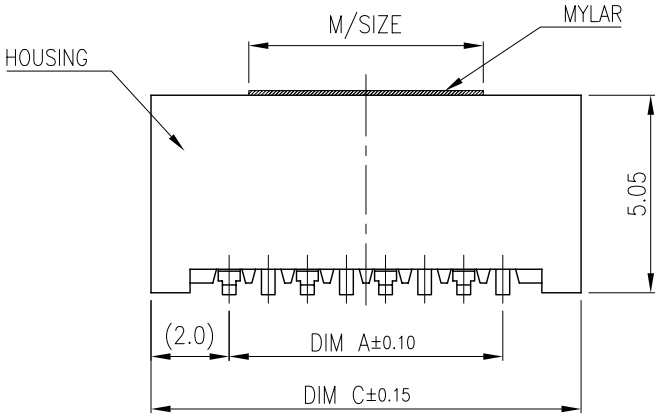

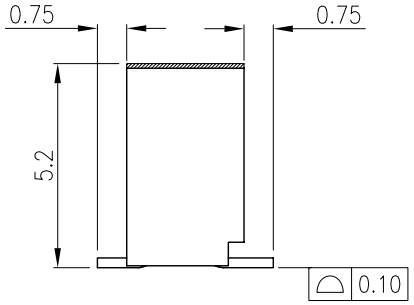

NOTES:
1. MATERIAL:
   1.1 HOUSING: LCP.,NATURAL
   UL94V-0.
   1.2 CONTACT: PHOSPHOR BRONZE
2. PLATING:
2.1 CONTACT:
   50u"~100u" NICKEL UNDERPLATING OVERALL.
   N: 120u"~200u" MATTE TIN PLATING.
2.1 SOLDER:
   50u"~100u" NICKEL UNDERPLATING OVERALL.
   N: 120u"~200u" MATTE TIN PLATING.
3. SPEC. PLS. REFER TO SPEC-50650-XXXXX-XXX
4. PACKAGE PLS. REFER TO 88358-XXXX-TRP
5. PART NUMBER:
   50654-XXX X X -004

ITEM	Housing Color.	Halogen Free	Package
004	NATURAL	HF	88358-xxCR

NO OF CONTACT

PACKING
0:TAPE & REEL
4:TAPE & REEL WITH MYLAR

PLATING
N:MATT TIN(LEAD FREE)

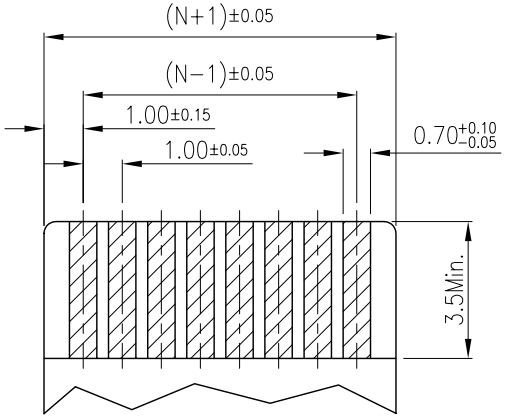

APPLICABLE FPC/FFC
RECOMMENDED DIMENSION
THICKNESS 0.3±0.03

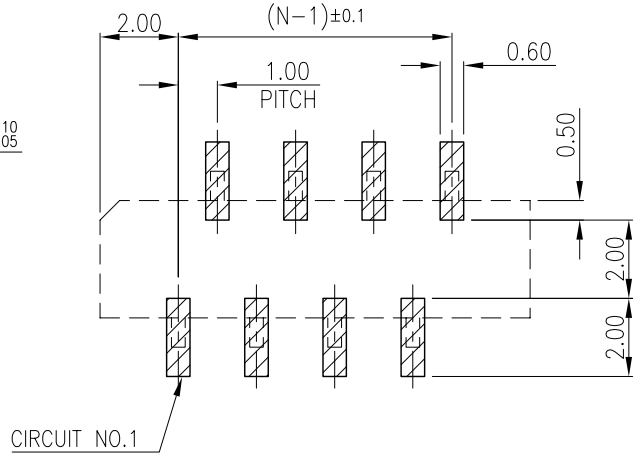

RECOMMENDED PCB LAYOUT
GENERAL TOLERANCE ±0.05

CKT	DIM A	DIM B	DIM C	M/SIZE
008	7.00	9.10	11.00	6.00
030	29.00	31.10	33.00	10.00

一般公差
TOLERANCES
X. ±0.5 .XX ±0.15
.X ±0.25 .XXX ±0.1
ANGLES ±2°

宏致電子股份有限公司
Aces Electronics Co.,Ltd.

檢驗尺寸標示
SYMBOLS C CRITICAL M MAJOR INDICATE CLASSIFICATION DIMENSION
C MARK IS CRITICAL DIM.
M MARK IS MAJOR DIM.

品名 (TITLE): 1.0mm Pitch Non-ZIF FPC Conn. SMT S/T TYPE

圖號 (DWG NO.): 50654-XXXXX-004

製圖 (DR): Xiaoxiong 16'/10/05
審核 (CHKD): Andrew
核准 (APPD): Charleslee

表面處理 (FINISH): ———
比例 (SCALE): 4:1
單位 (UNITS): mm
張數 (SHEET): 1 OF 2
SIZE: A4
REV: 0